International Journal of Business and Economics, 2019, Vol. 18, No. 1, 79-95

Influence of Taiwan Military's Facebook Community and Organizational Identification on Members' Attitude toward Joining the Military

Yung Tan*
College of Business, Feng Chia University, Taiwan

Ching-Wei Ho
Development of Marketing Management, Feng Chia University, Taiwan

Abstract

This research explores the effect of Taiwan military's Facebook community website on members' attitude toward the military, revealing the mediation effects of community and organizational identification on the attitude toward the military. This study analyzes quantitative survey data for military recruitment to validate five hypotheses, with the results showing that the Facebook community enhances community interaction, exchange of opinions, organizational identification, and attitude toward the military. The results also indicate that the attitude toward enlisting in the military is positively and significantly correlated with the community and organizational identification of the members of the Facebook community, although the effects with respect to community and organization differ.

Keywords: Facebook community; community identification; organizational identification; job-seekers' attitude

JEL classification: M12; M38;O15

1. Introduction

The military recruitment environment is becoming more challenging owing to the decreasing pool of potential recruits. Social networking sites in recent years are being used to strengthen recruitment target, taking on the role of one of the important strategies for recruitment. Considering recruitment as a marketing procedure, the process of exchange of information by word-of-mouth can be viewed as a crucial part of the procedure (Maurer et al., 1992). Marzocchi et al. (2013) consider the objects of recruitment as consumers and use consumer behavior and psychology arguments to study the possible intentions of candidates to join an

Received December 12, 2018; revised January 29, 2019; accepted April 4, 2019.
*Correspondence to: College of Business, Feng Chia University, Taiwan. E-mail: d7301@ms55.hinet.net.

organization; such an analysis can help improve the efficiency of human recruitment resources. Winston (2001) points out that the core of the recruitment theory is to determine how people can be influenced to choose a profession or to determine their intentions individually and emphasizes the existence of a high level of homogeneity among those who have been hired in a particular job field and those who may be recruited into the field. Recruitment-related activities in the early stages affect decisions and related intentions indirectly through two aspects of brand image: attitudes toward the organization and the attributes perceived of the job (Collins and Stevens, 2002). Few studies have analyzed this concept of intentions and decisions from a military perspective.

A company's Facebook page, which is utilized to communicate with external stakeholders, could be used as a means for employee engagement (Sias, 2017). People with a high level of organizational identification are inclined to join the organization and provide resources and advice that are helpful for the organization's development. For example, employees may recommend other people to join the organization or may provide valuable feedback and references. In other words, once the recruitment target members are identified, their identification with the national military organization and the recruitment community will improve their attitude toward the military.

By raising the target of recruitment to identify the military organization and the recruitment community, potential recruits' attitude of joining the military can be improved. Specifically, in the 2013 Glassdoor Recruitment Survey (2013) of people seeking employment, those who would probably use social media in their search accounted for 79%; in another report, 22% stated that had they found several suitable applicants online (Jobvite, 2017). However, the literature has not theoretically investigated sufficiently the use of a Facebook community for military recruitment propaganda as well as the attitude and intention of the military. Our empirical research aims to provide an assessment of the national military's Facebook community for recruitment to comprehend the effect of the organization and community identification of members on their attitude toward the military. Furthermore, this study targets to provide a direction for recruitment policy research.

Figure 1. Conceptual Model

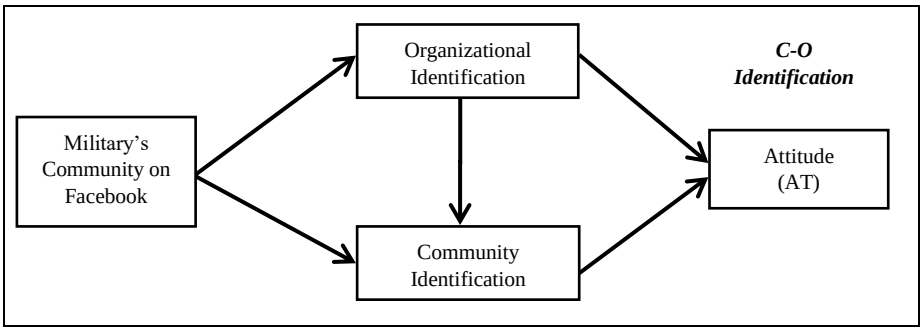

2. Literature Review and Hypothesis Development

2.1 Military's Facebook Community

In June 28, 2017, Facebook announced a monthly active user subscription of 2 billion people, while monthly active users in Taiwan hit 18 million. In addition, Taiwan topped in the smartphone penetration rate in the Asia-Pacific region (Poushter, 2016). Social networking sites provide a virtual platform for users from different places to interact instantly, thus forming a large-scale social network on the Internet, including blogs, microblogs, and dating sites. A service website is called a "community website" (Chen et al., 2010).

Taiwan national military's recruitment community website has been established for more than 7 years and is now one of the main channels for the recruitment of military volunteers. The most interesting features of the website for recruiting potential candidates are the recruitment process, expectations of the military lifestyle, and a facility to seek advice and details about job functions, workplaces, and benefits (Yeung and Gifford, 2011). Taiwan's armed forces have promoted the "recruiting system" policy since 2012, but volunteer recruitment has gradually become more difficult, because of the decreasing population and social environment. Therefore, the use of social networking in the recruitment process is an important strategy for the recruitment authorities. An increasing number of countries in the world are using websites to publish military recruitment information. The national military's Facebook community not only is beneficial to people joining the community with the desire to contact the national military group or understand the work characteristics of the organization, but also can serve as a means for the government to assess potential recruitment targets for the national army so as to enhance its recognition and image.

2.2 Community Identification

Social identity is defined as an individual's recognition of own membership of a social organization, involving value and emotional connotation (Tajfel, 1981). In other words, the member's cognition that he/she belongs to a brand community motivates him/her to classify him/herself into the frequently used community category. Thus, social identity is an important criterion to examine the connection between individuals and a social group (Palmer et al., 2013). Because of the online network's characteristics of high-end, continuous multi-party communication, time and geographical location are not limitations for the network; therefore, members of online brand communities can easily share product information and interact with each other, consequently developing harmonious community relationships as well as community identification (Laroche et al., 2013).

Online brand community is not only a physical place, but in reality is also a set of social relationships linking a brand with its customers and connecting customers with other customers (Ho, 2015), who constitute the basic framework of community relationships (Luo et al., 2015; McAlexander et al., 2002; Muniz and O'Guinn,

2001). In today's marketplace, these include the virtual marketspace of social media and other digital or online forms of communication and interaction (Huan, 2017). If consumers are considered as recruiters, then relationship building and identity formation can easily be shaped during interactive activities with the community members. Therefore, a national army recruitment strategy must use community power to successfully build a stronger relationship with people. Members' strong identification with the online community has been considered an important force of community effectiveness (Algesheimer et al., 2005; Bagozzi and Dholakia, 2006; Qu and Lee, 2011). Once the target group is identified, the group is likely to actively participate in community activities and demonstrate positive member behavior (Patwa et al., 2018). If the members participate in community activities, then they are more likely to become soldiers in the national military and use the Facebook community platform for exploring comments on the national military's brand page and responding to them, sharing experiences, and interacting with other followers or participating in events.

Through these exchanges, the members of the Facebook community can slowly identify with each other's views and influence behavioral orientation, which is similar to the army personnel. Based on the aforementioned discussion, we present the following hypothesis.

H1. The Facebook recruitment community of the national military positively influences the identification of military units with the national military community.

2.3 Organizational Identification

Organizational identification (OI) has been defined in numerous ways. It is usually labeled as a cognitive construct; specifically, it is defined as the alignment of organization values and individual values (Hall et al., 1970; Pratt, 1998; Stengel, 1987), "perception of oneness with or belongingness to" an organization (Ashforth and Mael, 1989), and the act of integrating self-perception related to membership in a particular organization into the general self-definition (Dutton et al., 1994; Elsbach, 1999; Rousseau, 1998). OI can also be viewed as the relationship between employees and their organization (Cheney et al., 2014). OI is employees' psychological belonging and support to the organization, resulting in their greater commitment to the organization's mission, increase in organizational centripetality and cohesion, and more active cooperation between the members of the organization (Bhattacharya and Sen, 2003).

Organizational identification is construed as an individual's psychological attachment to the organization that is more than an extension of interpersonal relationships and can exist even in the absence of interpersonal interaction or cohesion. In crediting the organization with a psychological reality beyond its relationships with individual members, OI enables a person to conceive with individual members and feel loyal enough to join the organization. To enhance the level of OI, firms must work to engage their stakeholders and increase the visibility of ideal organizational attributes (Dutton et al., 1994). Indeed employees'

psychological connection with their work has gained critical importance in the information/service sector of the 21st century (2014).

Given this background, we contend that people join the national military's Facebook community with the intention of understanding the workings of the national military. When they log onto the Facebook page and explore the characteristics and dynamics of the various units of the national military as well as share their experiences or express their dissatisfaction, they are in fact unconsciously interacting with each other and in the process establishing a relationship with the national military. The significance and experience of this relationship can enhance the identification of the national military organization. Theoretically, the views of the aforementioned literature can be presented as follows.

H2. The Facebook community of the national military positively influences recognition of national military organizations.

Although OI may benefit a company, previous research has indicated some potential risks of distrust associated with it (Dukerich et al., 1998; Hibbard et al., 2001). When consumers agree with the company, the company's social identity becomes more important to them and strives for other consumers to join the company (Boldero and Francis, 2000). Building internal competency within an organization can be very effective when managed well, as it can eliminate or reduce the costs of failing (De Villiers and Coleman, 2017). Most previous studies have focused on brand community identification (Algesheimer et al., 2005), while few studies have investigated the effects of national military organizations in establishing such OI. Moreover, in exploring community and recruitment issues recently, the subject's OI has received increasing attention.

The impact of Facebook community identification on the identification of people with national military organizations, however, has not been investigated yet. Therefore, the present study increases the extension and practicality of the theory of organizational identification. We recommend when Facebook followers identify with the national military community that they also identify with the national military organization. In other words, the identification of the recruitment community is positively associated with the recruiting organization.

H3. Recruitment community identification positively influences identification with units in the national military organizations.

2.4 Jobseekers' Attitude

The attribution of attitude can predict an individual's possible behavior in choosing a career - that is, an individual's self-evaluation of a specific behavior as being positive or negative constitutes that individual's attitude. An individual with a more positive attitude will have greater behavioral intention, and the inverse relationship is true as well. Recent studies have reviewed recruitment research (Breaugh and Starke, 2000; Chapman et al., 2005; Rynes and Cable, 2003; Saks, 2005), with most studies considering only outcome measures, such as a new entrant's performance or job satisfaction, that are measurable after entering

employment. However, what makes an organization attractive is less understood (Barber, 1998; Rynes, 1991). In fact, understanding the intent of potential recruits to join the national military is critical to recruiters. Therefore, recruitment researchers should conduct further studies on the attractiveness of organizations, especially during the early stages of recruitment (Barber, 1998; Baum and Überschaer, 2018; Breaugh and Starke, 2000; Collins and Han, 2004; Collins and Stevens, 2002). The sources of recruitment information are a crucial factor affecting organizational attractiveness.

Since the key to successful recruitment is to make non-objective contact and understanding (such as websites and word-of-mouth) with the jobseekers before the jobseekers decide to apply, improving their attitudes rather than rejecting them is vital (Baker-Eveleth et al., 2016). Therefore, we hypothesize the following.

H4. Community identification with recruitment goals positively influences the attitude of jobseekers entering national military organizations.

H5. Recruitment into national military organizations positively influences the attitude of jobseekers entering national military organizations.

3. Research Method

3.1 Sample

The Taiwan Institute of Innovation and Application Services of the Institute of Technology announced on May 1, 2017 that each person in Taiwan has an average of four community accounts, and Facebook and LINE constitute more than 80% of community website users. This study checks the hypothetical data collected from official Facebook followers of the national military spokesperson. This website was established on May 24, 2011. The follower page mainly provides the latest defense information (including recruitment information), which offers people an understanding of the national military. As of July 2018, the website had achieved a total of 310,000 followers. The study includes the recruitment of volunteers and compulsory duty personnel aged 18-26 years. This age group is the most popular for the use of Facebook and matches the research's purpose and limited scope, in that only the recruitment training center that uses Facebook is selected to implement relevant data collection (Figure 2).

The subject of the survey therefore (a) must be a member of the national military spokesperson's Facebook website and (b) should be registered and be using the website for at least 1 month. The proportion of observed variables must be at least 5/6, and the number of valid participants per independent variable must be at least 10 (the minimum proportion of observations for variables is 10:1) (Hair et al., 2010; Wah Yap et al., 2012). Marsh and Hau (1999) argue that structural equation modeling (SEM) analysis yields reliable coefficient values, with more than 400 samples having appropriate statistical analysis results. In other words, this study analyzes 14 variables. To use SEM statistics as an analytical tool, we need a minimum of 140 sample sizes. To improve the accuracy of the model, the sample

size is increased to the maximum possible.

Figure 2. Conceptual Model

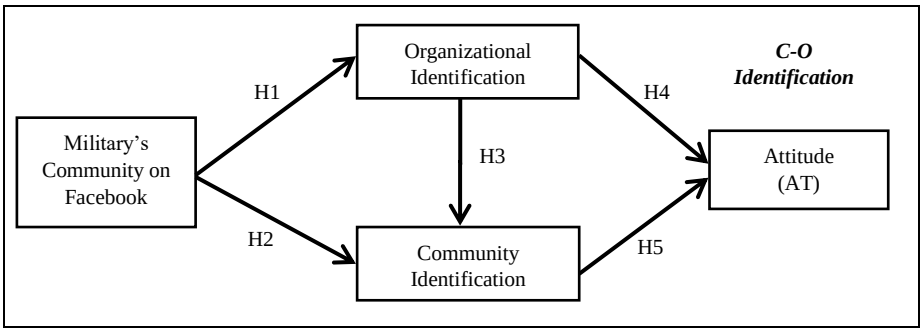

3.2 Data Gathering

We employ structured questionnaires specifically developed for this study to collect the data and also consider questionnaires of previous researchers (Bagozzi et al., 1991) to improve research reliability and validity. The target population of the research is members of the national military's Facebook page followers. (The Taiwan military social networking site is the largest and the oldest one). We set up the questionnaire in accordance with recruitment targets, qualifications, and conditions of the national military. The participants were asked to remember and follow their favorite service Facebook follower page when answering questions. This study guarantees anonymity of the participants and confidentiality of their responses.

Using simple random sampling, all participants were randomly selected at the recruitment training center to meet the sampling conditions. Next, face-to-face interviews were conducted for each of them. Data collection was completed in 60 working days, and 550 questionnaires were collected, of which 46 were invalid. Hence, 504 pieces of data are available for the data analysis.

3.3 Measures

The questionnaire items were designed and developed according to four research variables in this paper. In the first part, the national army's Facebook community is adapted from the project of Ellison et al. (2007). In the second part, community identification was measured using the three items proposed by Algesheimer et al. (2005). In the third part, OI was measured using the three items on the scale developed by Mael and Ashforth (1992). The fourth part is based on Ajzen's (1985, 1991) theory of planned behavior and Fishbein's (1967) decomposition of attitude into "perceived usefulness," "perceived ease of use," and "compatibility". The aforementioned evaluation structure items are all based on a seven-point Likert scale to investigate the extent to which military community and organizational identification influence behavioral intentions. Table 1 illustrates the

four variables - Military's Facebook community, Community identification, Organizational identification, and Jobseekers' attitude - and measurement results.

Table 1. Confirmatory Factor Analysis Results for the Constructs

Construct	Measurement item	Loading	α	CR	AVE
Taiwan military's Facebook community	Members of the community share and discuss any particular military service and will interact with each other.	0.81	0.895	0.898	0.746
	Compared with other communities, members of Taiwan military's Facebook community have higher motivation on joining the military voluntarily.	0.91			
	I believe that members of this community can gain information about recruitment and news about Taiwan military.	0.87			
Community identification	I believe that the community can reinforce a sense of identity.	0.88	0.854	0.865	0.684
	If there are any announcement and project in Taiwan military's Facebook community, then members are interested in understanding and participating in it.	0.87			
	If I want to volunteer as a solider, then I will join the Facebook community of military recruitment.	0.72			
Organizational identification	If I were a solider, then when people appreciate Taiwan's military, it seems like they would appreciate me.	0.67	0.827	0.825	0.615
	If I were a solider, then when people criticize Taiwan's military, it seems like they would criticize me.	0.78			
	If I were a solider, then I would be interested in others' opinions on the military.	0.88			
Attitude toward military	I believe raising community identification will influence my personal attitude of joining the military.	0.85	0.916	0.917	0.735
	I believe higher organizational identification will influence my personal attitude of joining the military.	0.99			
	If he/she thinks highly of the military, then the attitude of joining the military will tend to be positive and the intention of joining the military will tend to be higher.	0.87			
	If he/she thinks poorly of the military, then the attitude of joining the military will tend to be negative and the intention of joining the military will tend to be lower.	0.82			

3.4 Data Analysis

We perform data analysis following a previous method (Anderson and Gerbing, 1988). First, we evaluate credibility and convergence validity as shown in Table 1,

and second verify discriminant validity as shown in Table 2. The reliability of the variables is confirmed for a Cronbach's alpha greater than 0.8 (Bagozzi and Yi, 1988). Convergence validity, verification item consistency (CR), and average value (AVE) reflect the result. The analysis shows that the single factor loading value is greater than 0.7, the CR value is greater than 0.7, and AVE is greater than 0.5 (Gefen et al., 2000). The results meet the quantitative design criteria.

Table 2. Constructs and Their Measurement Items

Variables	Mean	SD	MF	CI	OI	MA
MF	4.638	1.218	0.868			
CI	4.651	1.273	0.850	0.826		
OI	4.881	1.269	0.626	0.676	0.891	
MA	4.853	1.218	0.676	0.698	0.784	0.857

Note: All numbers represent correlations, except for the diagonals, which display the square root of average variance extracted.

4. Results

4.1 Demographic Profile of Respondents

The respondents were national military recruits aged 18-26 years, and the network of this age group is the most popular. Currently, the majority of the military population is males; therefore, of the 504 respondents, 496 (98.4%) are men and 8 (1.6%) are women. In terms of age, the proportion of the 18-20-year age group is 57.1% and that of the 22-24-year age group is 20.2%. These two groups are followed by the 20-22-year age group at 19.2% and the 24-26-year age group at 1.8%. The 18-year-olds constitute 1.6%. All the interviewees were members of the national military's Facebook community. Among them, 90.8% logged in for 1-2 months, 2.5% for 3-4 months, and 1.4% for 4-5 months.

4.2 Measurement Model

The criteria for evaluating the convergence validity suggested by Fornell and Lacker (1981) are as follows: all the standardized factor load (λ) estimates are greater than 0.5, the t-value must reach a significant level, the combined reliability value (CR) should be a minimum 0.6, and AVE must be greater than 0.5. If these criteria are met, then each question can be significantly explained by the factor; in other words, a question measures one specific factor, and these measurements converge to their respective variables. We use the criterion established by Fornell and Lacker (1981) to evaluate the discriminant validity of the constructs; that is, the variance shared between a construct and other constructs should be less than the average variance shared with its measures. Table 2 demonstrates that the square root of the AVE of the indicators of each construct is greater than the correlations for that

construct; therefore, the model's discriminant validity is adequate.

We use SEM to analyze the structural relationships and associated hypotheses and use Amos 22.0 software for the analysis. The results indicate an overall model fit, as indicated by the χ^2 statistics (χ^2=569.06 , df =60 , χ^2/df =9.48). This is probably because the proportional chi-square test is too large for 504 samples; the results are not satisfactory, but a value of 4.56 is still acceptable. On the other hand, $p < 0.001$ is considered extremely significant. For the structural model, the absolute fit measure index values [GFI (0.949), AGFI (0.923; ≥ 0.90) and SRMR (0.364; ≤ 0.05) and the incremental fit indices NFI (0.963), CFI (0.949), and NFI (0.956; ≥ 0.90)] are satisfactory according to the standards suggested by Bagozzi (1980).

4.3 Structural Model

Based on the model shown in Figure 3 and the results given in Table 2, the standardized estimates of the model indicate a positive impact of the national military's Facebook community on community identification, organizational identification, and the attitude of joining the military. Thus, H1, H2, H3, H4, and H5 are verified. Among them, the Military's Facebook community (MF) has a strong influence on Community identification (CI) and the Organizational identification (OI) pair with Jobseekers' attitude (JA), followed by the Community identification (CI) pair with Organizational identification (OI), and the Military's Facebook Community (MF) pair with Organizational identification (OI).

Figure 3. Framework of the Structural Equation Model

The variational explanatory power (R2 value) of each potential variable to the

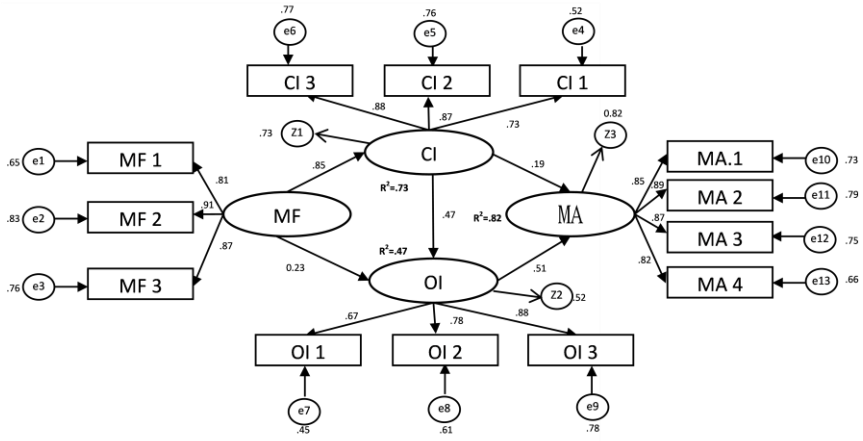

overall structural model, as shown in Figure 3, is between 0.47 and 0.82, which is sufficient to show that the research model is acceptable and has good explanatory power. Figure 3 and Table 3 show that the national military's Facebook community positively influences community identification (H1, b=0.85 , $p < 0.001$) and organizational identification (H2, b=0.23 , $p < 0.001$). Therefore, both H1 and H2

are supported. The model predictes a correlation between community identification and organizational identification (H3); the results show a significant and positive correlation between them ($b=0.47$, $p<0.001$), hence supporting H3. In this test, the national military Facebook community also shows a partial mediation effect on community identification and organizational identification ($b=0.85>b=0.23$).

Table 3. Results of Testing

Hypothesis	Standardized regression	t-value	Results
H1. MF→CI	0.853	18.73***	Supported
H2. MF→OI	0.235	2.460**	Supported
H3. CI→OI	0.474	4.774***	Supported
H4. CI→MA	0.190	4.211***	Supported
H5. OI→MA	0.765	12.285***	Supported

*** $p<0.001$. ** $p<0.01$.

Community identification also has a significant and positive impact on the attitude toward military (H4, $b=0.19$, $p<0.01$). In addition, organizational identification significantly and positively influences the attitude toward military (H5, $b=0.51$, $p<0.001$). Therefore, both H4 and H5 are also supported. In other words, the participants of the study (members of the national military's Facebook community) stated that once they think that they are part of the community or the military organization, they will definitely have a positive attitude toward the military and will most likely recommend friends to join the military.

The results of the model study show that the relationship between community identification and organizational identification for members of the national military's community website verifies the mediating effect of the attitude toward the military. National military community identification and the attitude toward military are significantly correlated; however, the impact of organization identification of the military on the attitude toward the military is significantly stronger than that of community identification on the attitude toward the military ($b=0.51>b=0.19$).

5. Discussions and Conclusions

This study aims to understand the perceptions of the members of the Facebook community about their community and organizational identification, further investigates the impact of community and organizational identification on the attitude toward military, and identifies potential recruitment marketing methods. Using the SEM software tool, we conduct quantitative statistical analysis on the recruiter—community identification and organizational identification survey results. The results prove the mediation effect of the national military's Facebook community on the attitude toward the military. Finally, we draw the following conclusion: the interaction of the national military's Facebook community can enhance community identification, organizational identification, and the attitude toward the military. The main contribution is to provide follow-up research directions for human resources-related scholars and recruitment directors to develop

recruitment policies.

5.1 Theoretical Development Implications

This study first demonstrates a significantly positive impact on the interactions between the community and the organizations identified by the recruits on Facebook. In addition, the national military community and organizational identification play a mediating role between the Facebook community and the attitude toward military. The findings reveal that the main purpose of the national military community is to bring people with certain personality traits or similar interests and backgrounds together through online media to promote their interaction. This is consistent with the studies by Laroche et al. (2013) and Fournier and Avery (2011) on social media communities for brands. In addition, the national military Facebook community can provide members with a greater feeling of belongingness to the team (i.e., recruiting community identification) and can strengthen the link between the recruitment target and national military identification, further enhancing the recruitment target.

Second, community identification and organizational identification (OI) both show a positively significant impact, but the effects are slightly different. The national military community has a stronger impact on community identification (path analysis coefficient = 0.85) than on national military OI (path analysis coefficient = 0.23). After the initiation of C–O community identification and OI as a mediator, the influence on the attitude toward the military is different. OI has a stronger effect on the attitude toward the military (path analysis coefficient = 0.51 > path analysis coefficient = 0.19), implying that it is an effective intermediary.

Third, most research has focused on consumer identification with a company (Bhattacharya and Sen, 2003) or specific brand communities (Algesheimer et al., 2005). This model proposes a unique empirical process using operational definitions. We consider both community identification and OI and investigate the attitude toward the military from the perspective of the members of the Facebook community. The study validates and proves this model's hypotheses in the context of the national military's Facebook community website. Our findings can be seen as groundbreaking, laying the groundwork for further research. In other words, understanding the nature and organization of Taiwan's military can increase the intention of joining the military. However, Taiwan's military is a national defense force and is confidential; therefore, people cannot easily understand the organization, which affects their willingness to join the military. Therefore, to enhance recruitment effectiveness, the national military should attempt to consider the public's understanding.

5.2 Management Development Implications

Some practical electronic talent recruitment and marketing practice inferences can be drawn from this study's results. First, the Facebook community of the national military clearly has a significant positive effect on C–O identification (i.e.,

OI and community identification). Therefore, talent recruitment officers who recognize the importance of the Facebook community or use e-recruitment should do their utmost to actively manage the national military's community on Facebook.

Second, the study provides novel explanations for recruiting directors and raises their focus on the national military's website (the relationship between the national military community and the attitude toward the military), which helps the recruiting authority to recognize the community's attitude toward the military. Especially in the case of limited recruitment, talent recruitment marketing executives should not only help recruit actual staff to use the national military's community on Facebook, but also to identify the national army organization.

Third, the study validates the site's fast marketing, high efficiency, lack of regional limits, and low cost; thus, talented recruiters are encouraged to use different social networking sites. The model and empirical evidence of this study illustrate the establishment of a Facebook community for the national military. By strengthening C-O identification, talent recruitment and marketing personnel can enhance the attitude of recruits toward the military.

5.3 Research Limitations and Future Research Directions

We recommend directions for future research as follows. First, this study uses OI and community identification variables as a premise to influence the attitude toward the military. However, subjective attitudes and behavioral perception variables can also be considered and checked as a premise. Second, the research targets mainly young people from Taiwan (≤ 30 years); in other words, the results of the survey may not be fully extended to other age groups. Third, the study was conducted in Taiwan, thus geographically limiting the findings. According to Hofstede (2001), the national cultural level shows that Taiwan's subject culture has greater influence than individualism. Therefore, the influence of different countries, education levels, social experience, and social behavior intentions may be different.

References

Ajzen, I., (1985), "From Intention to Actions: A Theory of Planned Behavior," *Action Control: From Cognition to Behavior*, J. Kuhl and J. Beckman eds., New York: Springer-Verlag, 11-39.

Ajzen, I., (1991), "The Theory of Planned Behavior," *Organizational Behavior and Human Decision Processes*, 50(2), 179-211.

Algesheimer, R., U. M. Dholakia, and A. Herrmann, (2005), "The Social Influence of Brand Community: Evidence from European Car Clubs," *Journal of Marketing*, 69(3), 19-34.

Anderson, J. C. and D. W. Gerbing, (1988), "Structural Equation Modeling in Practice: A Review and Recommended Two-Step Approach," *Psychological Bulletin*, 103(3), 411-423.

Ashforth, B. E. and F. Mael, (1989), "Social Identity Theory and The Organization," *Academy of Management Review*, 14(1), 20-39.

Bagozzi, R. P., (1980), "Performance and Satisfaction in An Industrial Sales Force: An Examination of Their Antecedents and Simultaneity," *Journal of Marketing*, 44(2), 65-77.

Bagozzi, R. P. and U. M. Dholakia, (2006), "Antecedents and Purchase Consequences of Customer Participation in Small Group Brand Communities," *International Journal of Research in Marketing*, 23(1), 45-61.

Bagozzi, R. P. and Y. Yi, (1988), "On the Evaluation of Structural Equation Models," *Journal of the Academy of Marketing Science*, 16(1), 74-94.

Bagozzi, R. P., Y. Yi, and L. W. Phillips, (1991), "Assessing Construct Validity in Organizational Research," *Administrative Science Quarterly*, 36(3), 421-458.

Baker-Eveleth, L. J., R. W. Stone, and D. M. Eveleth, (2016), "Job-Pursuit Intentions of Online Job Seekers," *Human Systems Management*, 35(3), 185-196.

Barber, A. E., (1998), *Recruiting Employees: Individual and Organizational Perspectives*, Thousand Oaks, CA: Sage.

Baum, M. and A. Überschaer, (2018), "When Do Employer Awards Pay Off and When Do They Not? The Impact of Award Familiarity on Applicants' Job Pursuit Intentions and the Moderating Role of Corporate Brand Awareness," *The International Journal of Human Resource Management*, 29(21), 3093-3117.

Bhattacharya, C. B. and S. Sen, (2003), "Consumer-Company Identification: A Framework for Understanding Consumers' Relationships with Companies," *Journal of Marketing*, 67(2), 76-88.

Boldero, J. and J. Francis, (2000), "The Relation between Self-Discrepancies and Emotion: The Moderating Roles of Self-Guide Importance, Location Relevance, and Social Self-Domain Centrality," *Journal of Personality and Social Psychology*, 78(1), 38-52.

Breaugh, J. A. and M. Starke, (2000), "Research on Employee Recruitment: So Many Studies, So Many Remaining Questions," *Journal of Management*, 26(3), 405-434.

Chapman, D. S., K. L. Uggerslev, S. A. Carroll, K. A. Piasentin, and D. A. Jones, (2005), "Applicant Attraction to Organizations and Job Choice: A Meta-Analytic Review of the Correlates of Recruiting Outcomes," *Journal of Applied Psychology*, 90(5), 928-944.

Chen, M. J., C. D. Chen, and C. K. Farn, (2010), "Exploring Determinants of Citizenship Behavior on Virtual Communities of Consumption: The Perspective of Social Exchange Theory," *International Journal of Electronic Business Management*, 8(3), 195-205.

Cheney, G., L. T. Christensen, and S. L. Dailey, (2014), "Communicating Identity and Identification In and Around Organizations," *The SAGE Handbook of Organizational Communication: Advances in Theory, Research, and Methods*, L. L. Putnam and D. K. Mumby eds., 3rd edition, Thousand Oaks, CA: Sage, 695-716.

Collins, C. J. and C. K. Stevens, (2002), "The Relationship between Early Recruitment-Related Activities and the Application Decisions of New Labor-Market Entrants: A Brand Equity Approach to Recruitment," *Journal of*

Applied Psychology, 87(6), 1121-1133.

Collins, C. J. and J. Han, (2004), "Exploring Applicant Pool Quantity and Quality: The Effects of Early Recruitment Practice Strategies, Corporate Advertising, and Firm Reputation," *Personnel Psychology*, 57(3), 685-717.

De Villiers, R. and L. Coleman, (2017), "Building Internal Competencies, Capabilities, and Capacity to Deliver Great Customer Experiences," *International Journal of Business and Economics*, 16(3), 319-321.

Dukerich, J. M., R. M. Kramer, and J. M. Parks, (1998), "The Dark Side of Organizational Identification," *Identity in Organizations: Building Theory Through Conversations*, D. A. Whetten and P. C. Godfrey eds., Thousand Oaks, CA: Sage, 245-256.

Dutton, J. E., J. M. Dukerich, and C. V. Harquail, (1994), "Organizational Images and Member Identification," *Administrative Science Quarterly*, 39(2), 239-263.

Ellison, N. B., C. Steinfield, and C. Lampe, (2007), "The Benefits of Facebook 'Friends:' Social Capital and College Students' Use of Online Social Network Sites," *Journal of Computer-Mediated Communication*, 12(4), 1143-1168.

Elsbach, K. D., (1999), "An Expanded Model of Organizational Identification," *Research in Organizational Behavior*, 21, 163-200.

Fishbein, M., (1967), "Attitude and the Prediction of Behavior," *Readings in Attitude Theory and Measurement*, M. Fishbein ed., New York: Wiley, 477-492.

Fishbein, M., (1980), "A Theory of Reasoned Action: Some Applications and Implications," *Nebraska Symposium on Motivation*, H. Howe and M. Page eds., Vol. 27, Lincoln, NE: University of Nebraska Press, 65-116.

Fornell, C. and D. F. Lacker, (1981), "Evaluation Structural Equation Models with Unobserved Variables and Measurement Error: Algebra and Statistics," *Journal of Marketing Research*, 18(3), 382-388.

Fournier, S. and J. Avery, (2011), "The Uninvited Brand," *Research Paper*, Boston University School of Management, No. 2010-32.

Gefen, D., D. Straub, and M. C. Boudreau, (2000), "Structural Equation Modeling and Regression: Guidelines for Research Practice," *Communications of the Association for Information Systems*, 4(1), 1-78.

Hair, J. F., W. C. Black, B. J. Babin, and R. E. Anderson, (2010), *Multivariate Data Analysis: A Global Perspective*, Upper Saddle River, NJ: Prentice Hall.

Hall, D. T., B. Schneider, and H. T. Nygren, (1970), "Personal Factors in Organizational Identification," *Administrative Science Quarterly*, 15(2), 176-190.

Hibbard, J. D., F. F. Brunel, R. P. Dant, and D. Iacobucci, (2001), "Does Relationship Marketing Age Well?" *Business Strategy Review*, 12(4), 29-35.

Ho, C.-W., (2015), "Identify with Community or Company? An Investigation on the Consumer Behavior in Facebook Brand Community," *Telematics and Informatics*, 32(4), 930-939.

Hofstede, G., (2001), *Culture's Consequences: Comparing Values, Behaviours, Institutions, and Organizations Across Nations*, 2nd edition, Thousand Oaks, CA: Sage.

Huan, T. C. T. and R. De Villiers, (2017), "Social Experiences: Consumers in the

Big Wide World," *International Journal of Business and Economics*, 16(3), 303-305.

Isa, A. and H. I. Ibrahim, (2014), "Talent Management Practices and Employee Engagement: A Study in Malaysian GLCs," *International Journal of Business, Economics and Law*, 4(1), 64-70.

Jobvite, (2017), 2017 Recruiter Nation Report, https://www.jobvite.com/wp-content/uploads/2017/09/Jobvite_2017_Recruiter_Nation_Report.pdf.

Laroche, M., M. R. Habibi, and M.-O. Richard, (2013), "To Be or Not to Be in Social Media: How Brand Loyalty Is Affected by Social Media?" *International Journal of Information Management*, 33(1), 76-82.

Luo, N., M. Zhang, and W. Liu, (2015), "The Effects of Value Co-Creation Practices on Building Harmonious Brand Community and Achieving Brand Loyalty on Social Media in China," *Computers in Human Behavior*, 48, 492-499.

Mael, F. and B. E. Ashforth, (1992), "Alumni and Their Alma Master: A Partial Test of the Reformulated Model of Organizational Identification," *Journal of Organizational Behavior*, 13(2), 103-123.

Marsh, H. W. and K. T. Hau, (1999), "Confirmatory Factor Analysis: Strategies for Small Sample Sizes," *Statistical Issues for Small Sample Research*, R. H. Hoyle ed., Thousand Oaks, CA: Sage, 251-284.

Marzocchi, G., G. Morandin, and M. Bergami, (2013), "Brand Communities: Loyal to the Community or to the Brand?" *European Journal of Marketing*, 47(1/2), 93-114.

Maurer, S. D., V. Howe, and T. W. Lee, (1992), "Organizational Recruiting as Marketing Management: An Interdisciplinary Study of Engineering Graduates," *Personnel Psychology*, 45(4), 807-833.

McAlexander, J. H., J. W. Schouten, and H. F. Koenig, (2002), "Building Brand Community," *Journal of Marketing*, 66(1), 38-54.

Muniz, A. M. and T. C. O'Guinn, (2001), "Brand Community," *Journal of Consumer Research*, 27(4), 412-432.

Palmer, A., N. Koenig-Lewis, and L. E. M. Jones, (2013), "The Effects of Residents' Social Identity and Involvement on Their Advocacy of Incoming Tourism," *Tourism Management*, 38, 142-151.

Patwa, N., C. Abraham, and A. D'Cruz, (2018), "The Brand Inside: Fulfilling the Needs of the New Employee Generation to Create Brand Advocates," *International Journal of Business and Economics*, 17(2), 143-162.

Poushter, J., (2016), "Smartphone Ownership and Internet Usage Continues to Climb in Emerging Economies," *Pew Research Center*, 22, 1-44.

Pratt, M. G., (1998), "To Be or Not to Be? Central Questions in Organizational Identification," *Identity in Organizations*, D. A. Whetten and P. C. Godfrey eds., Thousand Oaks, CA: Sage, 171-207.

Qu, H. and H. Lee, (2011), "Travelers' Social Identification and Membership Behaviors in Online Travel Community," *Tourism Management*, 32(6), 1262-1270.

Rousseau, D. M., (1998), "Why Workers Still Identify with Organizations," *Journal of Organizational Behavior: The International Journal of Industrial, Occupational and Organizational Psychology and Behavior*, 19(3), 217-233.

Rynes, S. L. and D. M. Cable, (2003), "Recruitment Research in the Twenty-First Century," *Handbook of Industrial and Organizational Psychology*, W. Borman, D. Ilgen, and R. Klimoski eds., Vol. 12, New York: Wiley and Sons, 55-76.

Rynes, S. L., (1991), "Recruitment, Job Choice, and Post-Hire Consequences: A Call for New Research Directions," *Handbook of Industrial and Organizational Psychology*, M. D. Dunnette and L. M. Hough eds., Palo Alto, CA: Consulting Psychologists Press, 399-444.

Saks, A. M., (2005), "The Impracticality of Recruitment Research," *Handbook of Personnel Selection*, A. Evers, N. Anderson, and O. Voskuijl eds., Oxford, UK: Blackwell, 419-439.

Sias, P. M., (2017), "Company Facebook and Organizational Identification," *Communication Research Reports*, 34(4), 335-343.

Stengel, M., (1987), "Identifikationsbereitschaft, Identifikation, Verbundenheit mit einer Organisation oder ihren zielen," *Zeitschrift fuer Arbeits- und Organisationspsychologie*, 31(4), 152-166.

Tajfel, H., (1981), *Human Groups and Social Categories: Studies in Social Psychology*, CUP Archive, Cambridge: Cambridge University Press.

Yap, B. W., T. Ramayah, and W. N. W. Shahidan, (2012), "Satisfaction and Trust on Customer Loyalty: A PLS Approach," *Business Strategy Series*, 13(4), 154-167.

Winston, M. D., (2001), "Recruitment Theory: Identification of Those Who are Likely to be Successful as Leaders," *Journal of Library Administration*, 32(3-4), 19-35.

Yeung, D. and B. Gifford, (2011), "Potential Recruits Seek Information Online for Military Enlistment Decision Making: A Research Note," *Armed Forces and Society*, 37(3), 534-549.